SCHEDULE OF PILE CAP

PILE CAP M.K.D.	COLUMN M.K.D.	PILE NOS & DIA	CUT OF LEVEL	REINFORCEMENT		PILE CAP SIZE	PILE CAP REINFORCEMENT		LENTH OF PILE
				VERTICAL	LATERAL		TOP	BOTTOM	
CP1	C1,C4,C6,C8,C10,C11, C15,C18,C19,C20,C28, C29,C41,C42, C44,C46,C47.	2 NOS & 450 dia	1.5 M.	8 - 12	8 dia bar @ 150 c/c	2100 x 800 x 600	16 dia @ 150 C/C BOTHWAYS	16 dia @ 150 C/C BOTHWAYS	15.00 M.
CP2	C2,C3,C5,C7,C12,C14, C16,C17,C21,C22, C31,C32,C33,C34,C35, C36,C37,C38,C39,C43, C45,C48,C49,C50, C51,C52,C53,C54,C55, C56,C57,C58,C59,C60, C61,C62	3 NOS & 450 dia	1.5 M.	8 - 12	8 dia bar @ 150 c/c	AS SHOWN IN FIGURE	16 dia @ 150 C/C BOTHWAYS	16 dia @ 150 C/C BOTHWAYS	15.00 M.

SCHEDULE OF TIE BEAM & BEAM

M K D.	SIZE (BXD)	LONGITUDINAL REINFORCEMENT				STIRRUPS
		AT SUPPORT		AT SPAN		
		TOP	BOTTOM	TOP	BOTTOM	
TB	250 x 400	3 - 16	3 - 16	3 - 16	3 - 16	8 dia @ 150 c/c
B1	250 x 400	4 - 20	3 - 20	4 - 20	3 - 20	8 dia @ 150 c/c
B2	250 x 400	4 - 16	2 - 16	2 - 16	4 - 16	8 dia @ 150 c/c
B3	250 x 300	3 - 16	2 - 16	2 - 16	3 - 16	8 dia @ 150 c/c

SCHEDULE OF SLAB

SLAB M.K.D.	SLAB THICKNESS	REINFORCEMENT AT LONGER DIRECTION	REINFORCEMENT AT SHORTER DIRECTION
S1	150	8 dia @ 150 c/c	8 dia @ 150 c/c
S2	150	12 dia @ 125 c/c 10 dia @ 150 c/c	MAIN BAR D . B.

SCHEDULE OF GROUND FLOOR ROOF BEAM

M K D.	SIZE (BXD)	LONGITUDINAL REINFORCEMENT				STIRRUPS
		AT SUPPORT		AT SPAN		
		TOP	BOTTOM	TOP	BOTTOM	
G.B1	400 x 150	4-20	3-20	4-20	3-20	8 dia @ 150 c/c
G.B2	400 x 150	3-16	3-16	3-16	3-16	8 dia @ 150 c/c

SCHEDULE OF R.C.C. COLUMN

COLUMN M.K.D.	SIZE (BXD)	LONGITUDINAL REINFORCEMENT	STIRRUPS
C1, C2, C3, C4, C5, C7, C8, C9, C10, C13, C14, C16, C17, C18, C21, C22, C23, C24, C25, C26, C27, C28, C37, C38, C39, C40, C41, C42, C43, C44, C45, C46, C47, C48.	250 x 400	6 -16 + 2 - 12 dia	2L 8 dia @ 150 c/c
C11, C12, C15, C19, C20, C29, C30, C36, C31, C32, C33, C34, C35, C49	250 x 400	8 -16 dia	2L 8 dia @ 150 c/c
C6	250 x 600	12 -16 dia	2L 8 dia @ 150 c/c

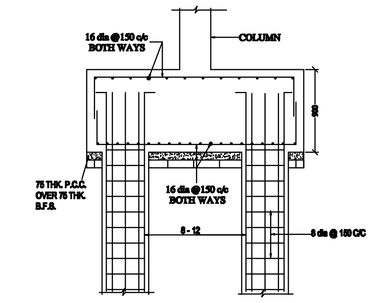

SECTION AT A - A

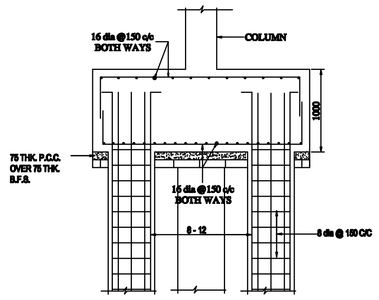

SECTION AT B - B

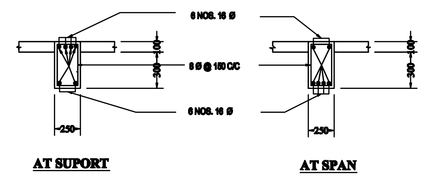

CROSS SECTION OF BEAM (B2)

SCALE - 1: 50

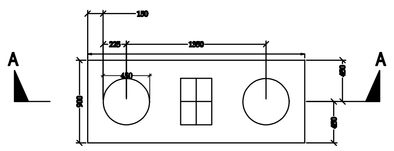

DTLS . PLAN OF PILE MKD. PC1

SCALE - 1:50

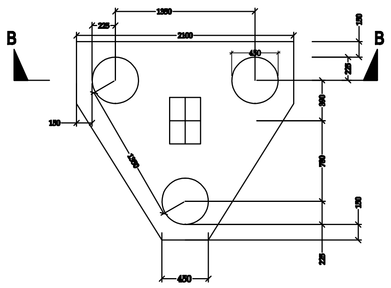

DTLS . PLAN OF PILE MKD. PC2

SCALE - 1:50

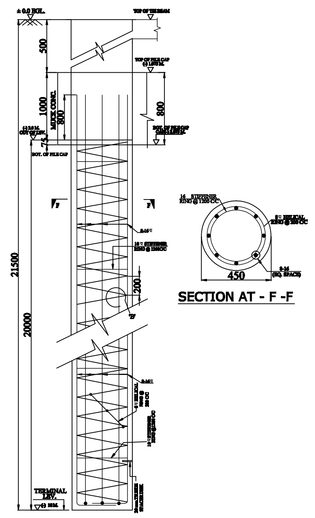

LONGITUDINAL SECTION OF 450 DIA PILE

LIFT REINFORCEMENT

BASE SIZE OF LIFT - SIZE OF LIFT +
300 BEARING IN BOTH SIDE.FOUNDATION BASE SLAB DEPTH - 300 MM.
BASE STEEL - 12MM. BAR
@ 300 C/C B/W IN DOUBLE LAYER .

VERTICAL REINFORCEMENT
- 10MM. BAR @ 180 C/C IN DOUBLE LAYER.

- TIES 8 MM. BAR @ 175 C/C
THICKNESS OF LIFT WELL 150 MM.

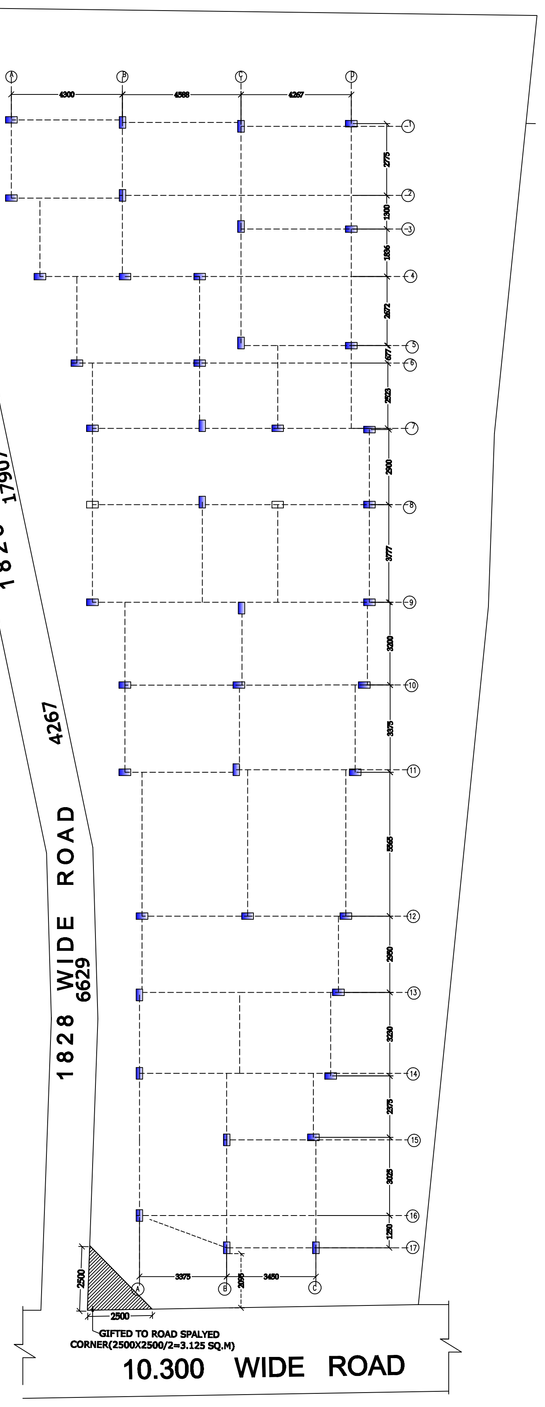

LAYOUT PLAN

SCALE – 1:100

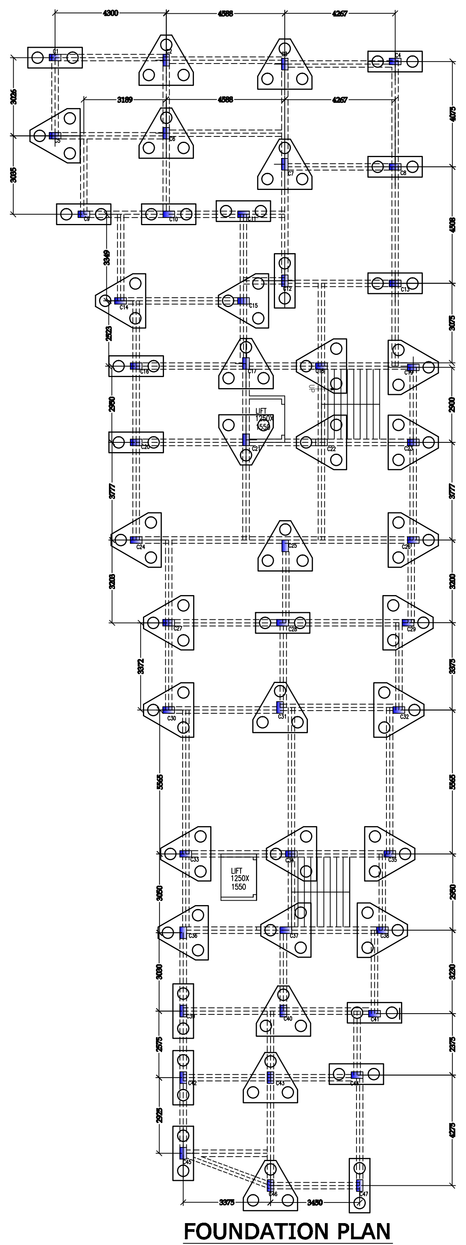

FOUNDATION PLAN

SCALE – 1:100

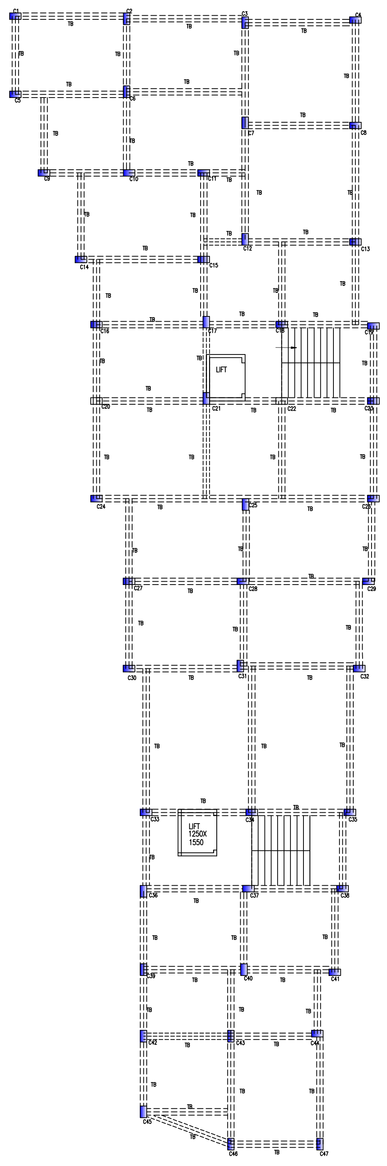

DTLS. OF TIE BEAM

SCALE – 1:100

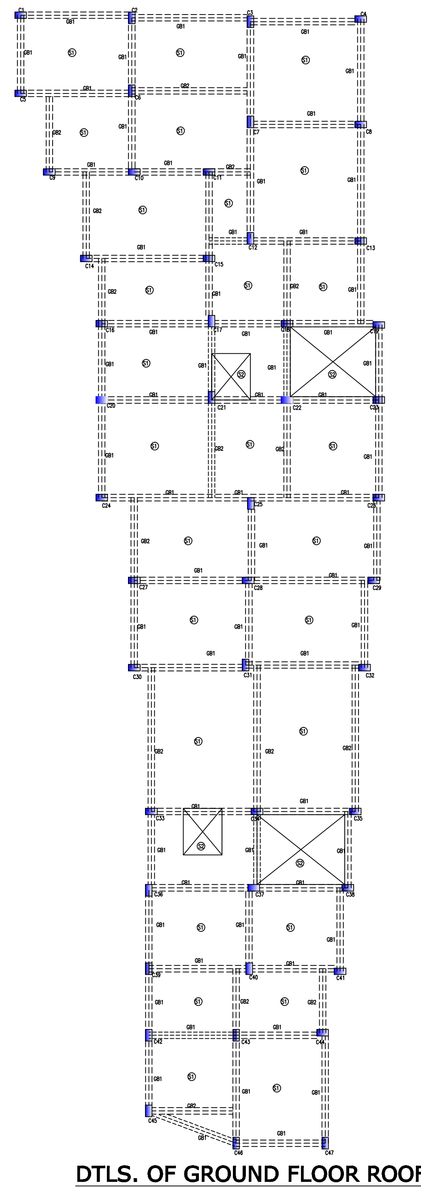

DTLS. OF GROUND FLOOR ROOF BEAM

SCALE – 1:100

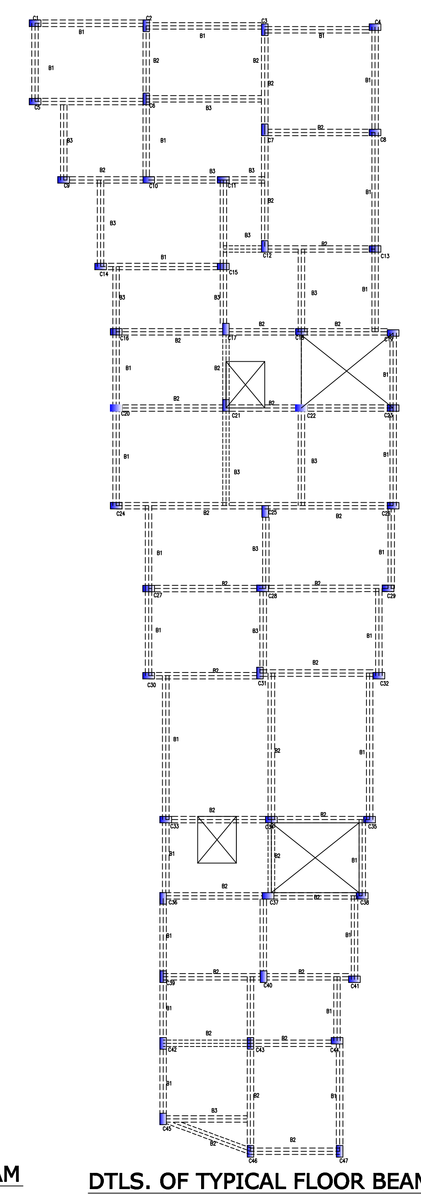

DTLS. OF TYPICAL FLOOR BEAM

SCALE – 1:100

PLAN FOR PROPOSED G+IV STORIED RESIDENTIAL BUILDING AT MOUZA- GOPALPUR, J. L. NO.-02, L.R. KHATIAN NO.-25163, 25164, 25534 L.R DAG NO.- 2325 ,2327,2328 & 2309 ,WARD NO.-04 BROUGH - I, P.S.-NARAYANPUR , DIST-24, PARGANA(S(N), "WITHIN BIDHANNAGAR MUNICIPAL CORPORATION"

SAGAR CHANDRA .

ANKITA CHANDRA .

CERTIFICATE OF OWNER'S

CERTIFIED THAT WE HAVE GONE THROUGH THE BUILDING RULES FOR THE BIDHANNAGAR MUNICIPAL CORPORATION IN VOGUE & ALSO UNDERTAKE TO ABIDE BY THOSE RULES DURING & AFTER CONSTRUCTION OF THE BUILDING.

SIGNATURE OF OWNER'S

CERTIFICATE OF ENGINEER

CERTIFIED THAT THE FOUNDATION AND THE SUPER STRUCTURE OF THE BUILDING HAVE BEEN SO DESIGN BY ME/US TO BE SAFE IN ALL RESPECT INCLUDING THE CONSIDERATION OF BEARING CAPACITY & SETTLEMENT OF SOIL ETC. AS PER I.S.I. STANDARD & N.B. CODE.

CERTIFIED THAT THE PLAN HAS BEEN DESIGN & DRAWN UP STRICTLY ACCORDING TO THE BUILDING RULES FOR "BIDHANNAGAR MUNICIPAL CORPORATION".

CERTIFIED THAT WE HAVE PERSONALLY VERIFIED THE SITE & FOUND IT IS BUILDABLE & NOT A TANK OR FILLED UP TANK.

SIGNATURE OF ENGINEER

AREA STATEMENT

TOTAL AREA OF LAND(IN DEED) = 12 K-11 CH-28 SFT	= 851.26 SQ.M
AREA OF LAND(IN PHYSICAL) = 12 K.-11 CH.-28 SFT.	= 851.26 SQ.M
GIFTED TO ROAD AS SPLAYED CORNER	=00K.-00 CH.-33.63 SFT. =3.125 SQ.M
NET AREA OF LAND (848.01-3.125)	= 12 K -10 CH -29.37 SFT = 848.139 SQ.M
WIDTH OF ROAD	= 18.30 M
PERMISSIBLE F.A.R (851.26 X 2.25)	= 1915.33 SQ.M
PROPOSED F.A.R 2.10	= 1792.56 SQ.M
PERMISSIBLE GROUND COVERAGE (50.00%)	= 424.06 SQ.M
PROPOSED GROUND COVERAGE (49.74%)	= 423.42 SQ.M
PERMISSIBLE HEIGHT	= 48.00 M.
PROPOSED HEIGHT	= 15.40 M.
GROUND FLOOR COVERED AREA	= 423.42 M^2
1ST. FLOOR COVERED AREA	= 423.42 M^2
2ND. FLOOR COVERED AREA	= 423.42 M^2
3RD. FLOOR COVERED AREA	= 423.42 M^2
4TH. FLOOR COVERED AREA	= 423.42 M^2
TOTAL FLOOR COVERED AREA	= 2117.10 M^2
SHOP AREA OF GROUND FLOOR (2.04)%	= 43.18 M^2
LEFT OPEN AREA OF LAND	= 424.71 M^2

EXEMPTION AREA

CAR PARKING 16 NOS(12.5X15)	= 187.50 M^2
STAIR, LIFT & LOBBY (17.07X4)	= 68.28 M^2
STAIR, LIFT & LOBBY (17.19X4)	= 68.76 M^2
	= 324.54 M^2

NET AREA - (2117.10 - 324.54) = 1792.56 M^2

PROPOSED F.A.R = 1792.56 / 851.26 = 2.10

REQUIRED CAR PARKING

REQUIRED CARPARKING - 1792.56 / 120	= 14.93 SAY 15 NOS
PROVIDED CAR PARKING	= 15 NOS

DOOR/WINDOW SCHEDULE

NO.	MASONRY OPENING	LTL.HT.	REMARKS.
D	1050 X 2100	2100	COLLAPSIBLE
D1	900 X 2100	2100	WOOD-FLUSHED
D2	750 X 2100	2100	P.V.C.
W1	1500 X 1200	2100	ALUMINIUM SLIDING
W2	1200 X 1200	2100	ALUMINIUM CASEMENT
W3	600 X 600	2100	ALUMINIUM CASEMENT

NOTES

All External walls are 200 thk. & Internal walls 125 & 75. unless noted otherwise . All chajja proj. 450. All dimensions are in millimetre.

SHEET TITLE

GROUND FLOOR PLAN, TYPICAL FLOOR PLAN ,ROOF PLAN, ELEVATION ,SECTIONS,SITE PLAN , LOCATION PLAN,DETAIL OF S.U.G.W RESERVOIR , SEPTIC TANK & O.H.W.R,SECTION OF BOUNDARY WALL,DOOR & WINDOW SCHEDULE.

SCALE

SITE PLAN - 1:300, LOCATION PLAN - 1:4000
ELEVATION SECTION & FLOOR PLAN - 1:100
PLAN & SECTION OF SEPTIC TANK - 1:50

DRAWN BY	DATE	CAD FILE NAME	SCALE
		la/ta/b.m.c	1:100